Engineering data		
Ratio	25	
Number of stages	2	
Rated output torque	450	Nm
Cycling output torque	900	Nm
Max output torque	1440	Nm
Emergency output torque	1800	Nm
Rated input speed	2500	rpm
Max input speed	8500	rpm
Efficiency*	96	%
Operating temperature	<-25; 90>	°C
Backlash	< 1	arcmin
Service life	20000	h
Running noise	70	dB(A)
Torsional stiffness	223.00	Nm/arcmin

** at rated speed & torque*

Lubrication	
Type	Standard
Lubricant	Castrol Optigear Synthetic 800/150

Customs info	
HS Code	84834090

Mechanical data		
Radial force for 20'000h	12000	N
Radial force for 30'000h	11000	N
Max. radial force	12000	N
Axial force for 20'000h	8500	N
Axial force for 30'000h	7500	N
Max. axial force	8500	N
Protection	IP65	
Input inertia	2.30	kgcm2
Mass	14.90	kg
Tilting moment for 20'000h	1219	Nm
Tilting moment for 30'000h	1117	Nm
Max. bending moment	80	Nm
Output shaft design	Flange with dowel hole	

Supported motors	
Motor types	TGN5, TGT5, TGH5
Clamping diameter	24 mm
Input flange	Motor adaptation - 2 part, round universal flange
Installation position	Any

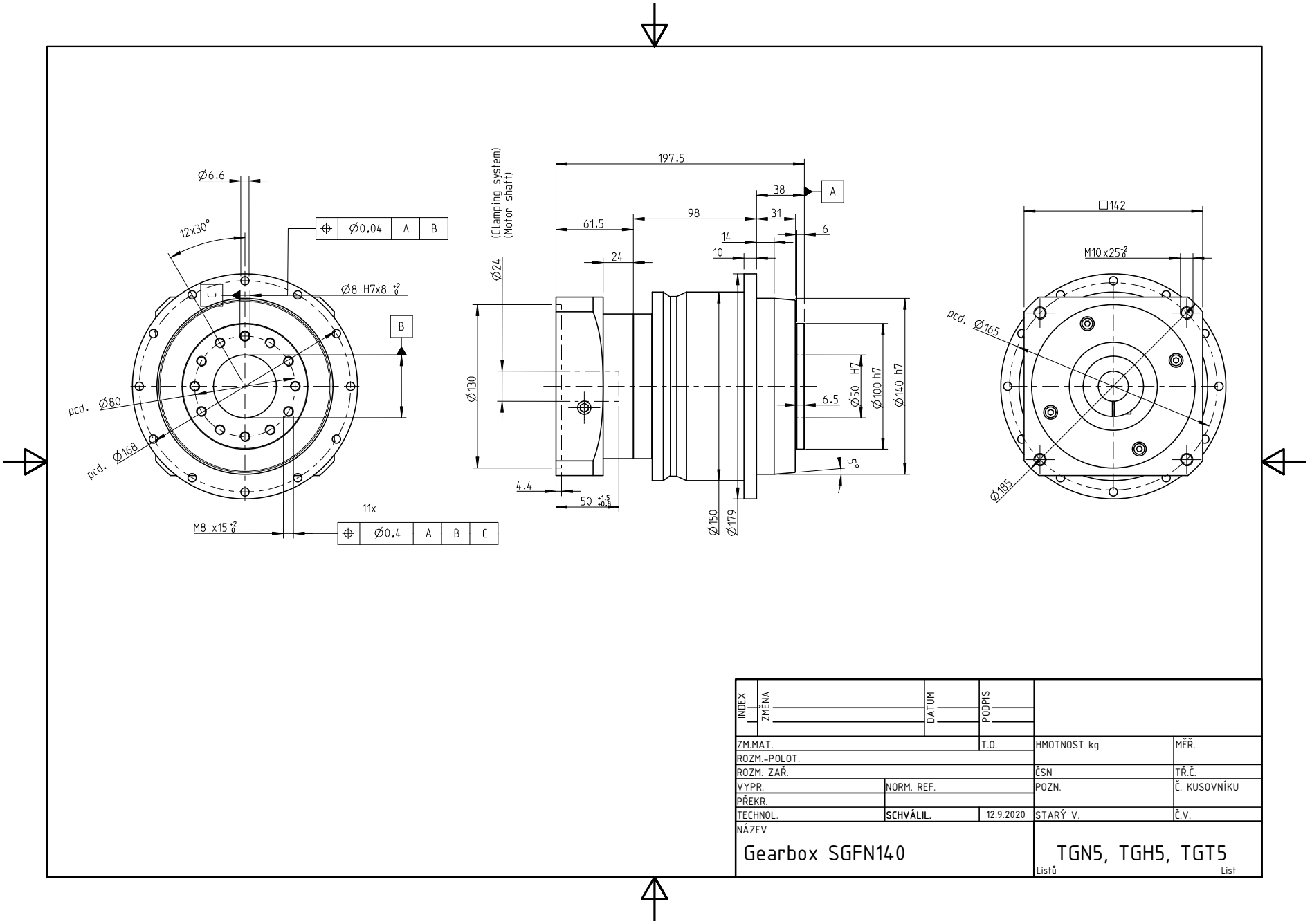

INDEX	ZMĚNA	DATUM	PODPIS	

ZM.MAT.		T.O.	HMOTNOST kg	MĚŘ.
ROZM.-POLOT.				
ROZM. ZAŘ.			ČSN	TŘ.Č.
VYPR.	NORM. REF.		POZN.	Č. KUSOVNÍKU
PŘEKR.				
TECHNOL.	SCHVÁLIL.	12.9.2020	STARÝ V.	Č.V.

NÁZEV

Gearbox SGFN140

TGN5, TGH5, TGT5

Listů List