Engineering data		
Ratio	4	
Number of stages	1	
Rated output torque	150	Nm
Cycling output torque	300	Nm
Max output torque	305	Nm
Emergency output torque	500	Nm
Rated input speed	1300	rpm
Max input speed	8500	rpm
Efficiency*	97	%
Operating temperature	<-25; 90>	°C
Backlash	< 1	arcmin
Service life	20000	h
Running noise	65	dB(A)
Torsional stiffness	77.00	Nm/arcmin

** at rated speed & torque*

Lubrication	
Type	Standard
Lubricant	Castrol Optigear Synthetic 800/150

Customs info	
HS Code	84834090

Mechanical data		
Radial force for 20'000h	4900	N
Radial force for 30'000h	4350	N
Max. radial force	4900	N
Axial force for 20'000h	9500	N
Axial force for 30'000h	8400	N
Max. axial force	9500	N
Protection	IP65	
Input inertia	2.94	kgcm2
Mass	5.14	kg
Tilting moment for 20'000h	475	Nm
Tilting moment for 30'000h	422	Nm
Max. bending moment	80	Nm
Output shaft design	Flange with dowel hole	

Supported motors	
Motor types	TGN6, TGT6
Clamping diameter	24 mm
Input flange	Motor adaptation - 2 part, round universal flange
Installation position	Any

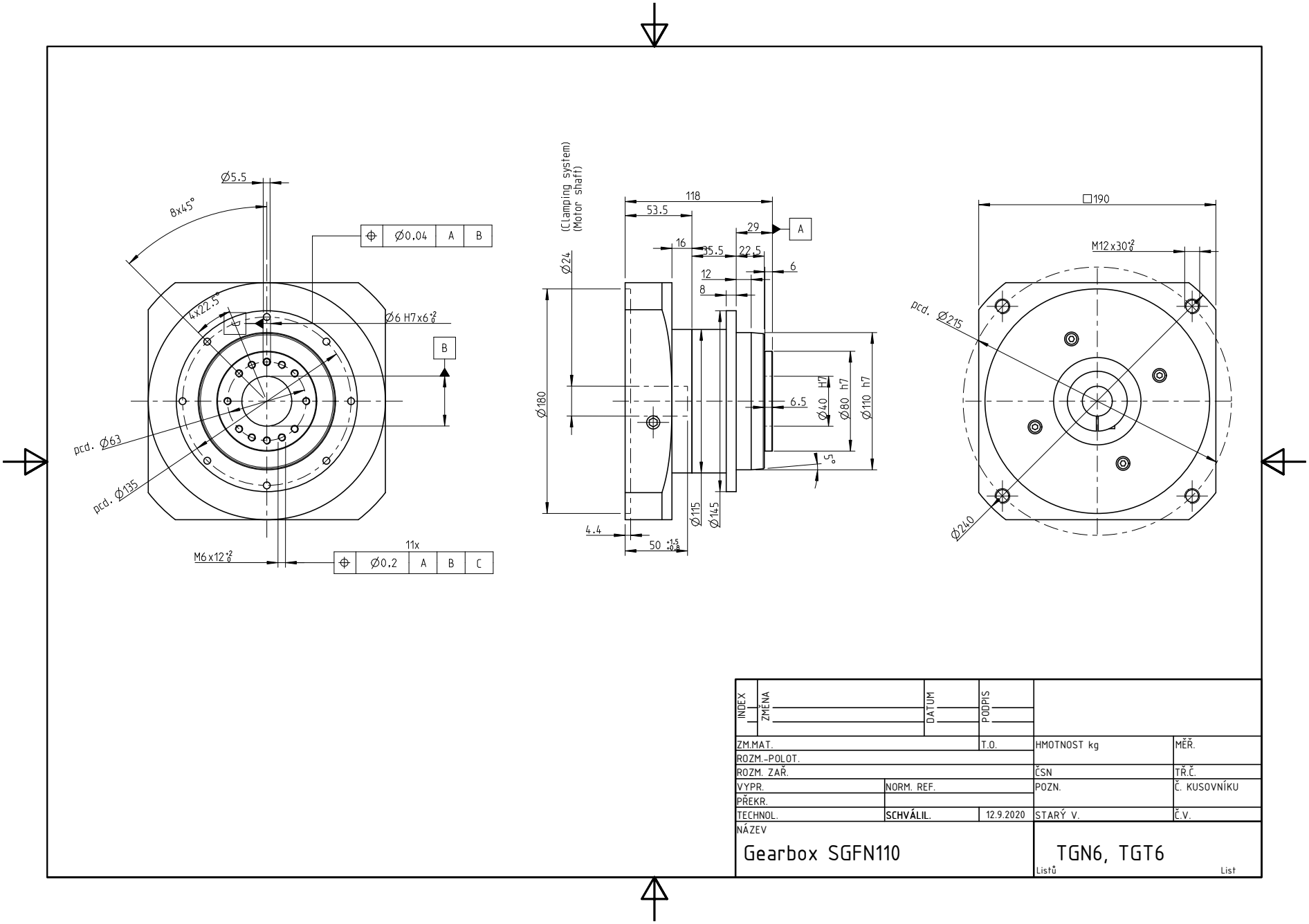
Ø5.5
8x45°
4x22.5°
Ø0.04 A B
Ø6 H7x6 +2 0
B
pcd. Ø63
pcd. Ø135
M6x12 +2 0
11x
Ø0.2 A B C
(Clamping system)
(Motor shaft)
Ø24
118
53.5
29
A
16
35.5
22.5
6
12
8
Ø180
6.5
Ø40 H7
Ø80 h7
Ø110 h7
5°
Ø115
Ø145
4.4
50 +1.5 +0.8
□190
M12x30 +2 0
pcd. Ø215
Ø240
INDEX
ZMĚNA
DATUM
PODPIS
ZM.MAT.
T.O.
HMOTNOST kg
MĚŘ.
ROZM.-POLOT.
ROZM. ZAŘ.
ČSN
TŘ.Č.
VYPR.
NORM. REF.
POZN.
Č. KUSOVNÍKU
PŘEKR.
TECHNOL.
SCHVÁLIL.
12.9.2020
STARÝ V.
Č.V.
NÁZEV
Gearbox SGFN110
TGN6, TGT6
Listů
List