Engineering data		
Ratio	4	
Number of stages	1	
Rated output torque	30	Nm
Cycling output torque	60	Nm
Max output torque	60	Nm
Emergency output torque	80	Nm
Rated input speed	2100	rpm
Max input speed	14000	rpm
Efficiency*	97	%
Operating temperature	<-25; 90>	°C
Backlash	< 2	arcmin
Service life	20000	h
Running noise	60	dB(A)
Torsional stiffness	13.20	Nm/arcmin

** at rated speed & torque*

Lubrication	
Type	Standard
Lubricant	Castrol Optigear Synthetic 800/150

Customs info	
HS Code	84834090

Mechanical data		
Radial force for 20'000h	2150	N
Radial force for 30'000h	1900	N
Max. radial force	2150	N
Axial force for 20'000h	4300	N
Axial force for 30'000h	3800	N
Max. axial force	4300	N
Protection	IP65	
Input inertia	0.29	kgcm2
Mass	1.31	kg
Tilting moment for 20'000h	132	Nm
Tilting moment for 30'000h	117	Nm
Max. bending moment	18	Nm
Output shaft design	Flange with dowel hole	

Supported motors	
Motor types	TGN2, TGT2, TGH2
Clamping diameter	14 mm
Input flange	Motor adaptation - 2 part, round universal flange
Installation position	Any

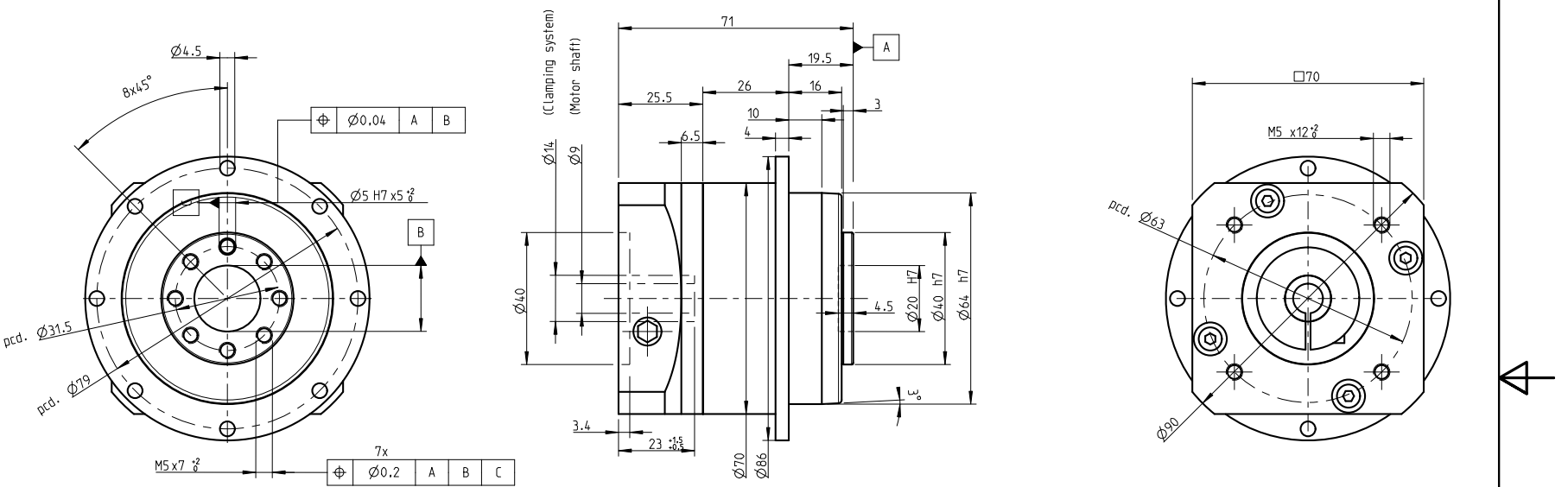

INDEX	ZMĚNA	DATUM	PODPIS	

ZM.MAT.		T.O.	HMOTNOST kg	MĚŘ.
ROZM.-POLOT.				
ROZM. ZAŘ.			ČSN	TŘ.Č.
VYPR.	NORM. REF.		POZN.	Č. KUSOVNÍKU
PŘEKR.				
TECHNOL.	SCHVÁLIL.	12.9.2020	STARÝ V.	Č.V.

NÁZEV

Gearbox SGFN064

TGN2, TGH2, TGT2

Listů List