Engineering data		
Ratio	16	
Number of stages	2	
Rated output torque	390	Nm
Cycling output torque	460	Nm
Max output torque	730	Nm
Emergency output torque	920	Nm
Rated input speed	2600	rpm
Max input speed	5500	rpm
Efficiency*	96	%
Operating temperature	<-25; 90>	°C
Backlash	< 9	arcmin
Service life	20000	h
Running noise	70	dB(A)
Torsional stiffness	72.00	Nm/arcmin

** at rated speed & torque*

Lubrication	
Type	Standard
Lubricant	Grease (lifetime lubrication)

Customs info	
HS Code	84834090

Mechanical data		
Radial force for 20'000h*	5200	N
Radial force for 30'000h*	4600	N
Max. radial force*	8400	N
Axial force for 20'000h	7000	N
Axial force for 30'000h	6000	N
Max. axial force	11000	N
Protection	IP54	
Input inertia	7.11	kgcm2
Mass	21.84	kg
Tilting moment for 20'000h	497	Nm
Tilting moment for 30'000h	440	Nm
Max. bending moment	180	Nm
Output shaft design	Shaft key	

** Defined for point of action at ½ output shaft length*

Supported motors	
Motor types	TGN4, TGT4, TGH4
Clamping diameter	35 mm
Input flange	Motor adaptation - one part
Installation position	Any

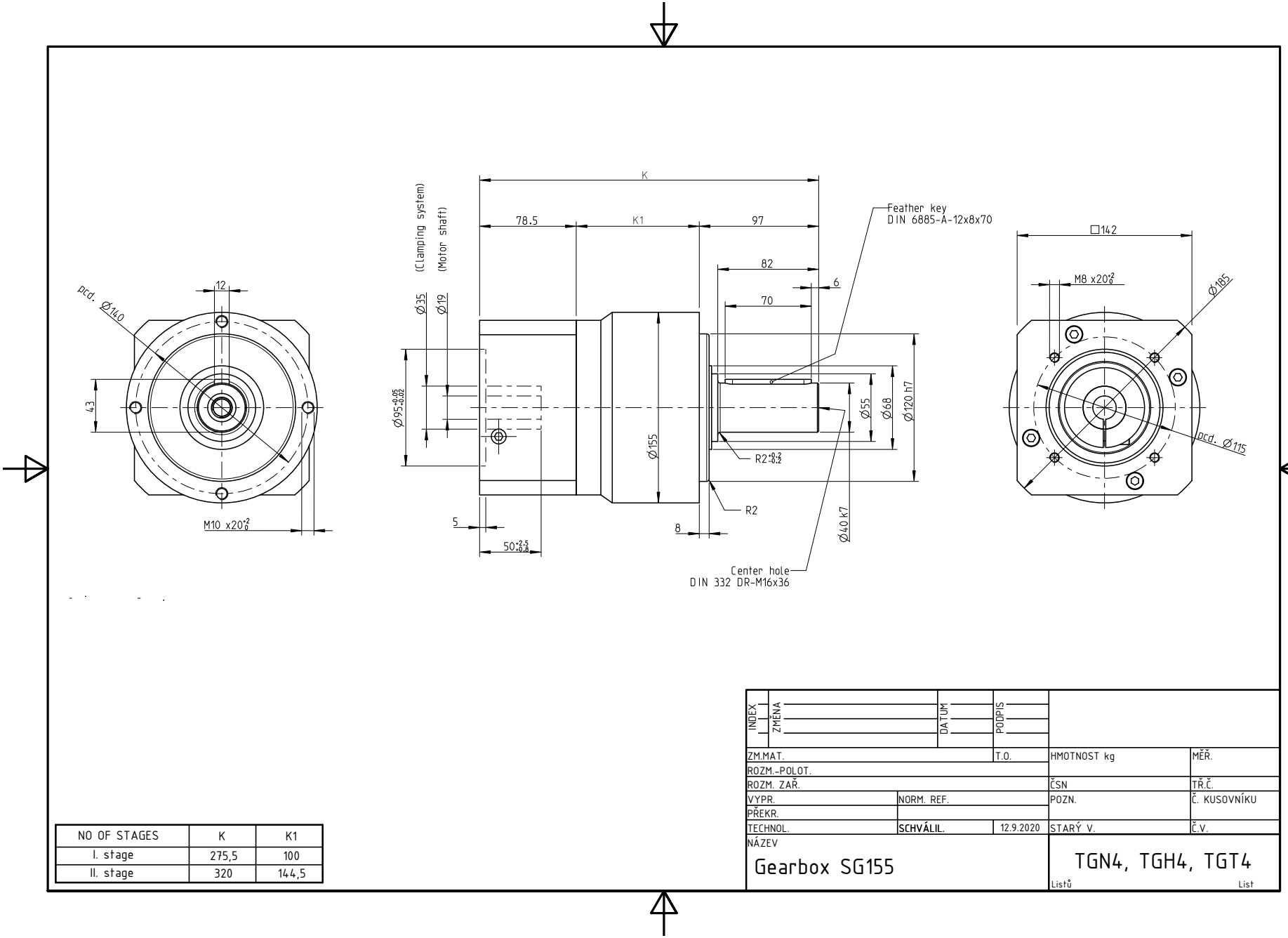

NO OF STAGES	K	K1
I. stage	275,5	100
II. stage	320	144,5

INDEX	ZMĚNA	DATUM	PODPIS		
ZM.MAT.			T.O.	HMOTNOST kg	MĚŘ.
ROZM.-POLOT.					
ROZM. ZAŘ.				ČSN	TŘ.Č.
VYPR.		NORM. REF.		POZN.	Č. KUSOVNÍKU
PŘEKR.					
TECHNOL.		SCHVÁLIL.	12.9.2020	STARÝ V.	Č.V.
NÁZEV	Gearbox SG155			TGN4, TGH4, TGT4	
				Listů	List