| Engineering data | | |
|---|---|---|
| Ratio | 9 | |
| Number of stages | 2 | |
| Rated output torque | 52 | Nm |
| Cycling output torque | 97 | Nm |
| Max output torque | 146 | Nm |
| Emergency output torque | 260 | Nm |
| Rated input speed | 4000 | rpm |
| Max input speed | 7000 | rpm |
| Efficiency* | 97 | % |
| Operating temperature | <-25; 90> | °C |
| Backlash | < 9 | arcmin |
| Service life | 20000 | h |
| Running noise | 60 | dB(A) |
| Torsional stiffness | 16.10 | Nm/arcmin |

** at rated speed & torque*

| Lubrication | |
|---|---|
| Type | Standard |
| Lubricant | Grease (lifetime lubrication) |

| Customs info | |
|---|---|
| HS Code | 84834090 |

| Mechanical data | | |
|---|---|---|
| Radial force for 20'000h* | 1900 | N |
| Radial force for 30'000h* | 1700 | N |
| Max. radial force* | 3100 | N |
| Axial force for 20'000h | 2000 | N |
| Axial force for 30'000h | 1500 | N |
| Max. axial force | 3800 | N |
| Protection | IP54 | |
| Input inertia | 0.62 | kgcm2 |
| Mass | 3.92 | kg |
| Tilting moment for 20'000h | 99 | Nm |
| Tilting moment for 30'000h | 89 | Nm |
| Max. bending moment | 16 | Nm |
| Output shaft design | Shaft key | |

** Defined for point of action at ½ output shaft length*

| Supported motors | |
|---|---|
| Motor types | TGN3, TGT3, TGH3 |
| Clamping diameter | 19 mm |
| Input flange | Motor adaptation - one part |
| Installation position | Any |

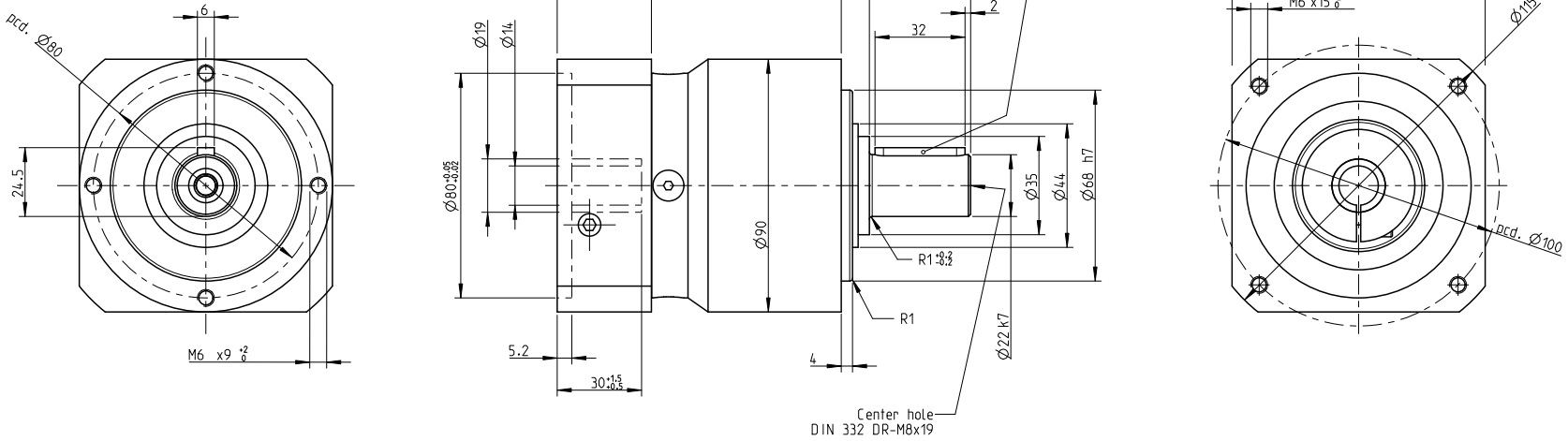


| NO OF STAGES | K | K1 |
|---|---|---|
| I. stage | 147 | 67,5 |
| II. stage | 164,5 | 85 |

| INDEX | ZMĚNA | DATUM | PODPIS | | |
|---|---|---|---|---|---|
| ZM.MAT. | | | T.O. | HMOTNOST kg | MĚŘ. |
| ROZM.-POLOT. | | | | | |
| ROZM. ZAŘ. | | | | ČSN | TŘ.Č. |
| VYPR. | | NORM. REF. | | POZN. | Č. KUSOVNÍKU |
| PŘEKR. | | | | | |
| TECHNOL. | | SCHVÁLIL. | 12.9.2020 | STARÝ V. | Č.V. |

NÁZEV

Gearbox SG090

TGN3, TGH3, TGT3

Listů List