Engineering data		
Ratio	5	
Number of stages	1	
Rated output torque	146	Nm
Cycling output torque	172	Nm
Max output torque	275	Nm
Emergency output torque	500	Nm
Rated input speed	2150	rpm
Max input speed	6500	rpm
Efficiency*	98	%
Operating temperature	<-25; 90>	°C
Backlash	< 7	arcmin
Service life	20000	h
Running noise	65	dB(A)
Torsional stiffness	39.50	Nm/arcmin

** at rated speed & torque*

Lubrication	
Type	Standard
Lubricant	Grease (lifetime lubrication)

Customs info	
HS Code	84834090

Mechanical data		
Radial force for 20'000h*	2500	N
Radial force for 30'000h*	2150	N
Max. radial force*	4000	N
Axial force for 20'000h	4000	N
Axial force for 30'000h	3000	N
Max. axial force	5900	N
Protection	IP54	
Input inertia	1.77	kgcm2
Mass	7.53	kg
Tilting moment for 20'000h	168	Nm
Tilting moment for 30'000h	144	Nm
Max. bending moment	40	Nm
Output shaft design	Smooth shaft	

** Defined for point of action at ½ output shaft length*

Supported motors	
Motor types	TGN4, TGT4, TGH4
Clamping diameter	24 mm
Input flange	Motor adaptation - one part
Installation position	Any

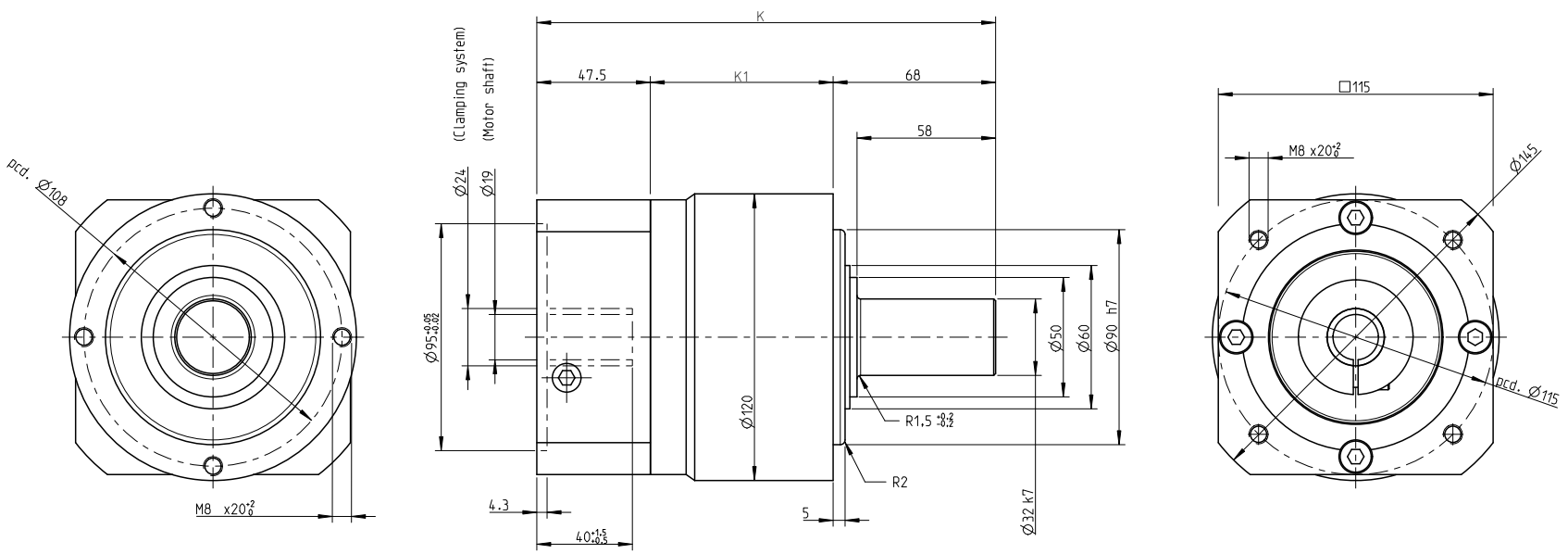

NO OF STAGES	K	K1
I. stage	192	76,5
II. stage	219,5	104

INDEX	ZMĚNA	DATUM	PODPIS		
ZM.MAT.			T.O.	HMOTNOST kg	MĚŘ.
ROZM.-POLOT.					
ROZM. ZAŘ.				ČSN	TŘ.Č.
VYPR.		NORM. REF.		POZN.	Č. KUSOVNÍKU
PŘEKR.					
TECHNOL.		SCHVÁLIL.	12.9.2020	STARÝ V.	Č.V.

NÁZEV

Gearbox SG120

TGN4, TGH4, TGT4

Listů List