Engineering data		
Ratio	10	
Number of stages	1	
Rated output torque	32	Nm
Cycling output torque	38	Nm
Max output torque	60	Nm
Emergency output torque	200	Nm
Rated input speed	4000	rpm
Max input speed	7000	rpm
Efficiency*	96	%
Operating temperature	<-25; 90>	°C
Backlash	< 7	arcmin
Service life	20000	h
Running noise	60	dB(A)
Torsional stiffness	10.00	Nm/arcmin

** at rated speed & torque*

Lubrication	
Type	Standard
Lubricant	Grease (lifetime lubrication)

Customs info	
HS Code	84834090

Mechanical data		
Radial force for 20'000h*	750	N
Radial force for 30'000h*	650	N
Max. radial force*	1250	N
Axial force for 20'000h	1000	N
Axial force for 30'000h	900	N
Max. axial force	1600	N
Protection	IP54	
Input inertia	0.36	kgcm2
Mass	2.15	kg
Tilting moment for 20'000h	31	Nm
Tilting moment for 30'000h	27	Nm
Max. bending moment	16	Nm
Output shaft design	Shaft key	

** Defined for point of action at ½ output shaft length*

Supported motors	
Motor types	TGN4, TGT4, TGH4
Clamping diameter	19 mm
Input flange	Motor adaptation - one part
Installation position	Any

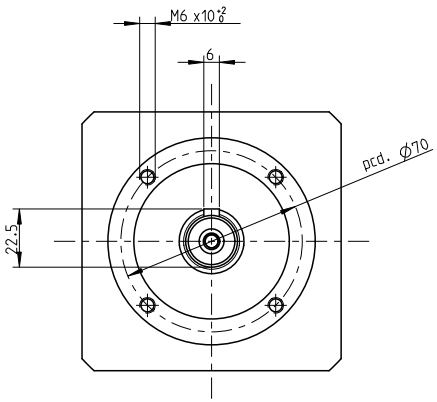

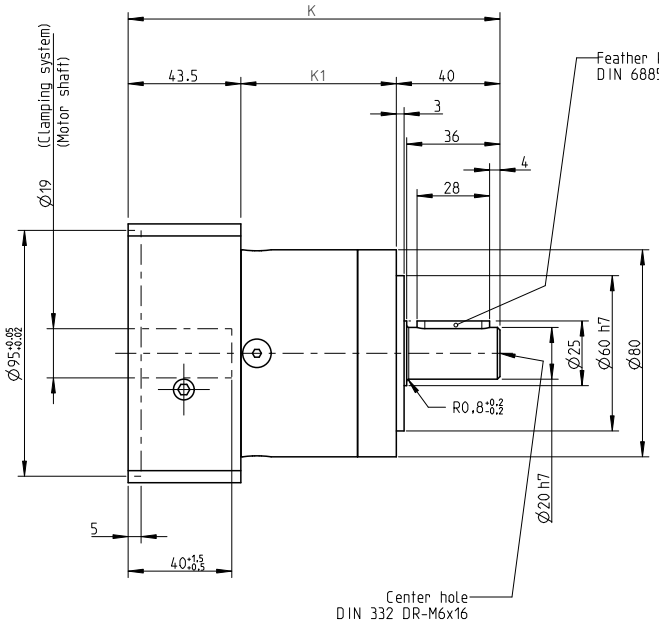

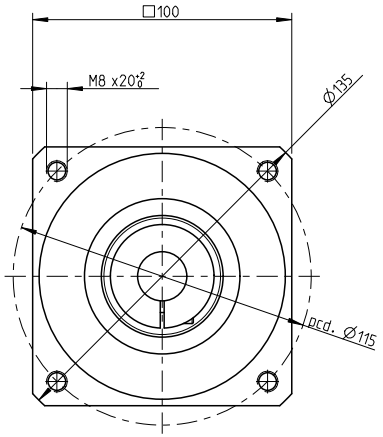

NO OF STAGES	K	K1
I. stage	143,5	60
II. stage	161	77,5
III. stage	178,5	95

INDEX	ZMĚNA	DATUM	PODPIS		
ZM.MAT.			T.O.	HMOTNOST kg	MĚŘ.
ROZM.-POLOT.					
ROZM. ZAŘ.				ČSN	TŘ.Č.
VYPR.		NORM. REF.		POZN.	Č. KUSOVNÍKU
PŘEKR.					
TECHNOL.		SCHVÁLIL.	12.9.2020	STARÝ V.	Č.V.
NÁZEV					
Gearbox SG080				TGN4, TGH4, TGT4	
				Listů	List