Engineering data		
Ratio	15	
Number of stages	2	
Rated output torque	15	Nm
Cycling output torque	18	Nm
Max output torque	28	Nm
Emergency output torque	36	Nm
Rated input speed	5000	rpm
Max input speed	18000	rpm
Efficiency*	96	%
Operating temperature	<-25; 90>	°C
Backlash	< 19	arcmin
Service life	20000	h
Running noise	58	dB(A)
Torsional stiffness	1.00	Nm/arcmin

** at rated speed & torque*

Lubrication	
Type	Standard
Lubricant	Grease (lifetime lubrication)

Customs info	
HS Code	84834090

Mechanical data		
Radial force for 20'000h*	200	N
Radial force for 30'000h*	160	N
Max. radial force*	200	N
Axial force for 20'000h	200	N
Axial force for 30'000h	160	N
Max. axial force	240	N
Protection	IP54	
Input inertia	0.03	kgcm2
Mass	0.44	kg
Tilting moment for 20'000h	5	Nm
Tilting moment for 30'000h	4	Nm
Max. bending moment	4	Nm
Output shaft design	Smooth shaft	

** Defined for point of action at ½ output shaft length*

Supported motors	
Motor types	TGN2, TGT2, TGH2
Clamping diameter	9 mm
Input flange	Motor adaptation - one part
Installation position	Any

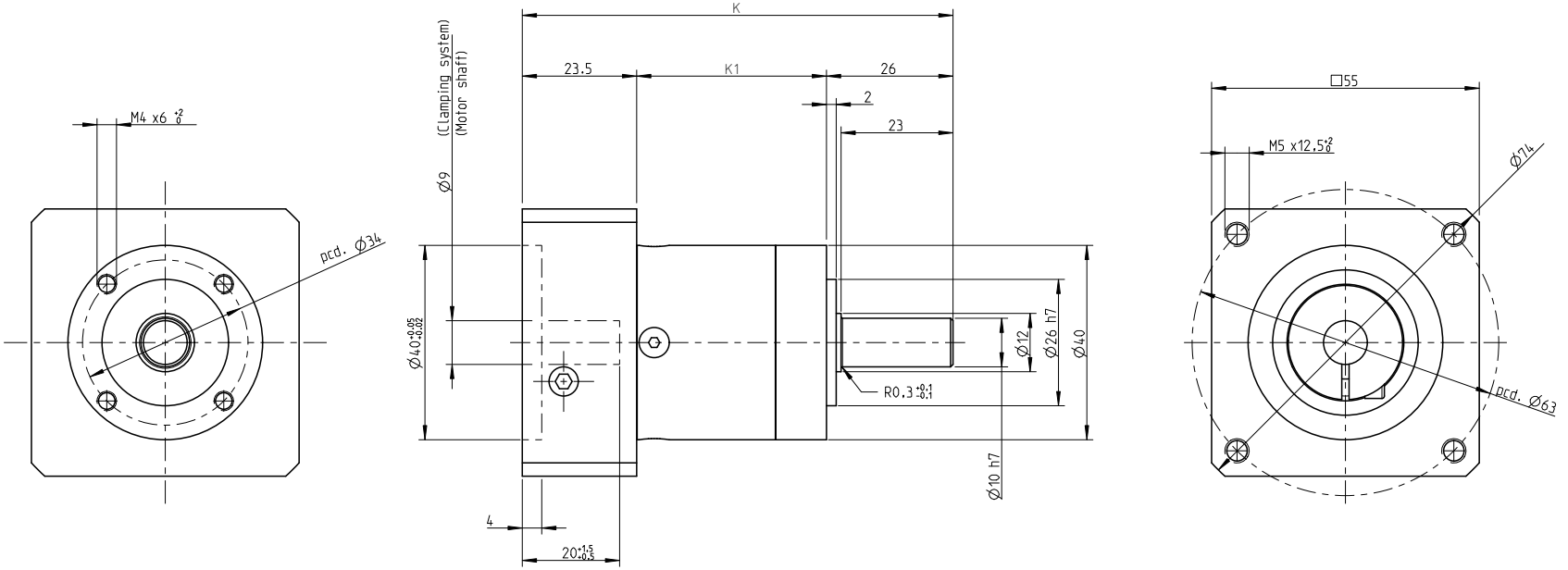

NO OF STAGES	K	K1
I. stage	88,5	39
II. stage	101,5	52
III. stage	114	64,5

INDEX	ZMĚNA	DATUM	PODPIS		
ZM.MAT.			T.O.	HMOTNOST kg	MĚŘ.
ROZM.-POLOT.					
ROZM. ZAŘ.				ČSN	TŘ.Č.
VYPR.		NORM. REF.		POZN.	Č. KUSOVNÍKU
PŘEKR.					
TECHNOL.		SCHVÁLIL.	12.9.2020	STARÝ V.	Č.V.
NÁZEV	Gearbox SG040			TGN2, TGH2, TGT2	
				Listů	List