Engineering data		
Ratio	7	
Number of stages	1	
Rated output torque	55	Nm
Cycling output torque	65	Nm
Max output torque	104	Nm
Emergency output torque	178	Nm
Rated input speed	4000	rpm
Max input speed	7000	rpm
Efficiency*	97	%
Operating temperature	<-25; 90>	°C
Backlash	< 7	arcmin
Service life	20000	h
Running noise	60	dB(A)
Torsional stiffness	12.00	Nm/arcmin

** at rated speed & torque*

Lubrication	
Type	Standard
Lubricant	Grease (lifetime lubrication)

Customs info	
HS Code	84834090

Mechanical data		
Radial force for 20'000h*	1900	N
Radial force for 30'000h*	1700	N
Max. radial force*	3100	N
Axial force for 20'000h	2000	N
Axial force for 30'000h	1500	N
Max. axial force	3800	N
Protection	IP54	
Input inertia	0.41	kgcm2
Mass	3.26	kg
Tilting moment for 20'000h	99	Nm
Tilting moment for 30'000h	89	Nm
Max. bending moment	16	Nm
Output shaft design	Smooth shaft	

** Defined for point of action at ½ output shaft length*

Supported motors	
Motor types	TGN3, TGT3, TGH3
Clamping diameter	19 mm
Input flange	Motor adaptation - one part
Installation position	Any

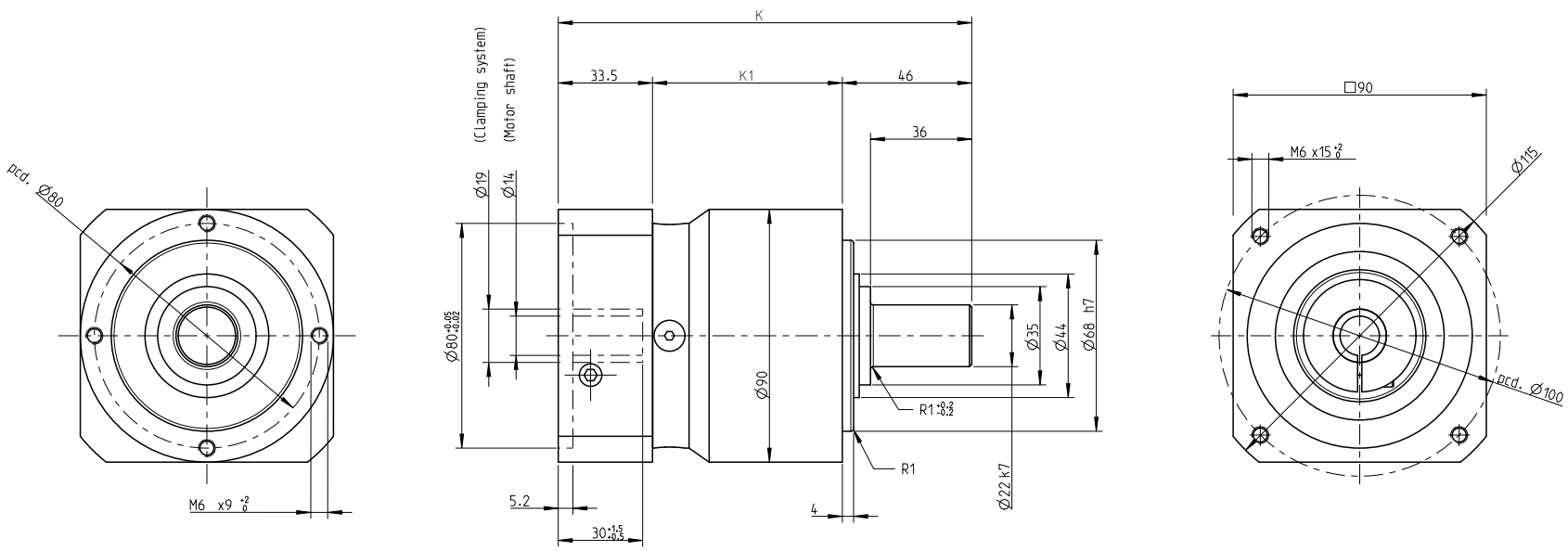

NO OF STAGES	K	K1
I. stage	147	67,5
II. stage	164,5	85

INDEX	ZMĚNA	DATUM	PODPIS		
ZM.MAT.			T.O.	HMOTNOST kg	MĚŘ.
ROZM.-POLOT.					
ROZM. ZAŘ.				ČSN	TŘ.Č.
VYPR.		NORM. REF.		POZN.	Č. KUSOVNÍKU
PŘEKR.					
TECHNOL.		SCHVÁLIL.	12.9.2020	STARÝ V.	Č.V.
NÁZEV					
Gearbox SG090				TGN3, TGH3, TGT3	
				Listů	List