| Engineering data | | |
|---|---|---|
| Ratio | 8 | |
| Number of stages | 1 | |
| Rated output torque | 42 | Nm |
| Cycling output torque | 50 | Nm |
| Max output torque | 80 | Nm |
| Emergency output torque | 190 | Nm |
| Rated input speed | 4000 | rpm |
| Max input speed | 7000 | rpm |
| Efficiency* | 97 | % |
| Operating temperature | <-25; 90> | °C |
| Backlash | < 7 | arcmin |
| Service life | 20000 | h |
| Running noise | 60 | dB(A) |
| Torsional stiffness | 8.00 | Nm/arcmin |

** at rated speed & torque*

| Lubrication | |
|---|---|
| Type | Standard |
| Lubricant | Klübersynth GE 14-112 |

| Customs info | |
|---|---|
| HS Code | 84834090 |

| Mechanical data | | |
|---|---|---|
| Radial force for 20'000h* | 750 | N |
| Radial force for 30'000h* | 650 | N |
| Max. radial force* | 1250 | N |
| Axial force for 20'000h | 1000 | N |
| Axial force for 30'000h | 900 | N |
| Max. axial force | 1600 | N |
| Protection | IP54 | |
| Input inertia | 0.37 | kgcm2 |
| Mass | 2.13 | kg |
| Tilting moment for 20'000h | 31 | Nm |
| Tilting moment for 30'000h | 27 | Nm |
| Max. bending moment | 16 | Nm |
| Output shaft design | Shaft key | |

** Defined for point of action at ½ output shaft length*

| Supported motors | |
|---|---|
| Motor types | TGN4, TGT4, TGH4 |
| Clamping diameter | 19 mm |
| Input flange | Motor adaptation - one part |
| Installation position | Any |

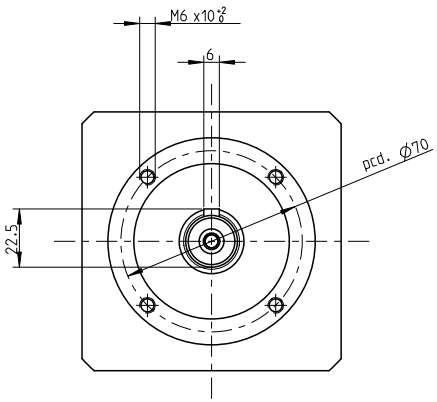


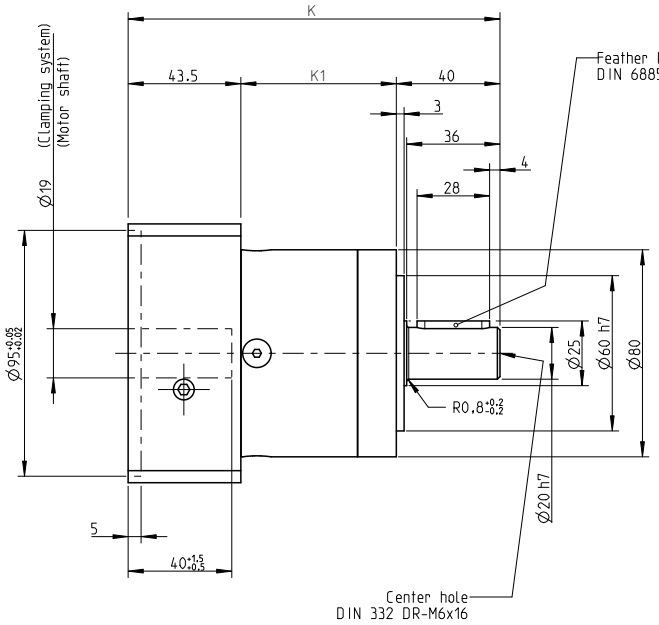


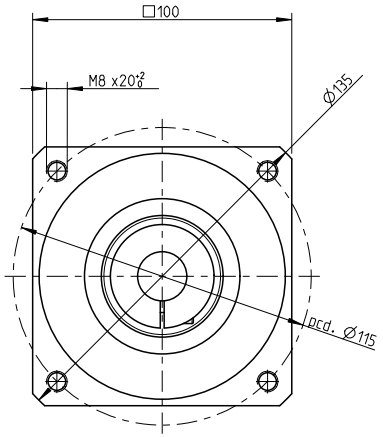


| NO OF STAGES | K | K1 |
|---|---|---|
| I. stage | 143,5 | 60 |
| II. stage | 161 | 77,5 |
| III. stage | 178,5 | 95 |

| INDEX | ZMĚNA | DATUM | PODPIS | | |
|---|---|---|---|---|---|
| ZM.MAT. | | | T.O. | HMOTNOST kg | MĚŘ. |
| ROZM.-POLOT. | | | | | |
| ROZM. ZAŘ. | | | | ČSN | TŘ.Č. |
| VYPR. | | NORM. REF. | | POZN. | Č. KUSOVNÍKU |
| PŘEKR. | | | | | |
| TECHNOL. | | SCHVÁLIL. | 12.9.2020 | STARÝ V. | Č.V. |
| NÁZEV | | | | | |
| Gearbox SG080 | | | | TGN4, TGH4, TGT4 | |
| | | | | Listů | List |