Engineering data		
Ratio	40	
Number of stages	2	
Rated output torque	25	Nm
Cycling output torque	30	Nm
Max output torque	46	Nm
Emergency output torque	80	Nm
Rated input speed	4500	rpm
Max input speed	13000	rpm
Efficiency*	93	%
Operating temperature	<-25; 90>	°C
Backlash	< 12	arcmin
Service life	20000	h
Running noise	58	dB(A)
Torsional stiffness	5.70	Nm/arcmin

** at rated speed & torque*

Lubrication	
Type	Standard
Lubricant	Grease (lifetime lubrication)

Customs info	
HS Code	84834090

Mechanical data		
Radial force for 20'000h*	1050	N
Radial force for 30'000h*	900	N
Max. radial force*	1650	N
Axial force for 20'000h	1350	N
Axial force for 30'000h	1000	N
Max. axial force	2100	N
Protection	IP54	
Input inertia	0.09	kgcm2
Mass	1.72	kg
Tilting moment for 20'000h	42	Nm
Tilting moment for 30'000h	36	Nm
Max. bending moment	12	Nm
Output shaft design	Shaft key	

** Defined for point of action at ½ output shaft length*

Supported motors	
Motor types	TGN3, TGT3, TGH3
Clamping diameter	14 mm
Input flange	Motor adaptation - one part
Installation position	Any

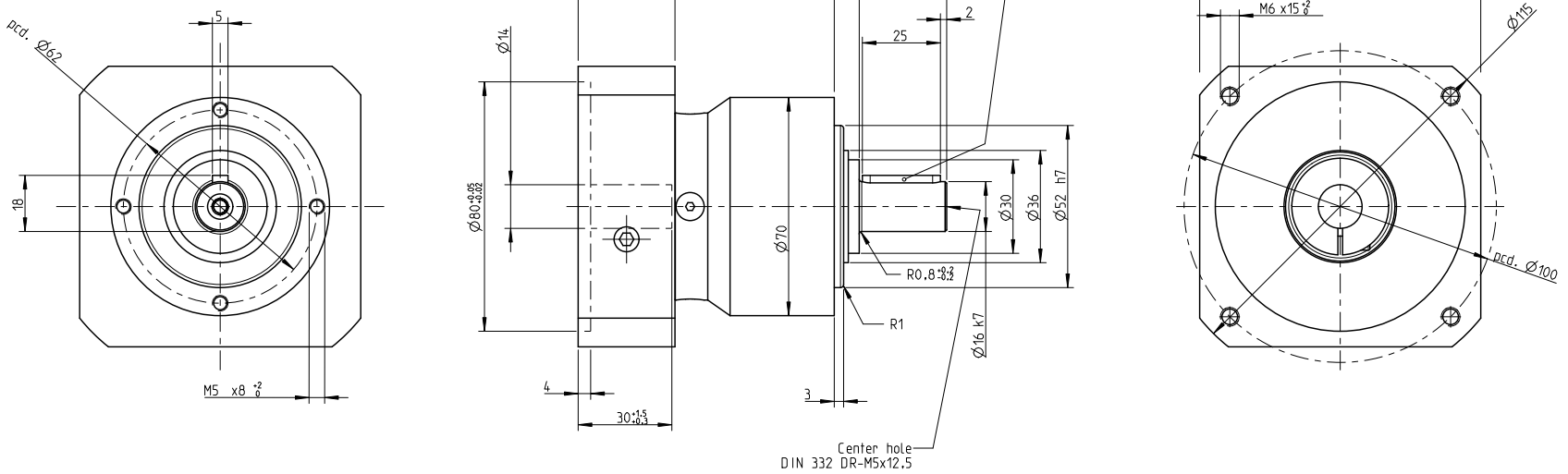

NO OF STAGES	K	K1
I. stage	118	51
II. stage	131	64

INDEX	ZMĚNA	DATUM	PODPIS		
ZM.MAT.			T.O.	HMOTNOST kg	MĚŘ.
ROZM.-POLOT.					
ROZM. ZAŘ.				ČSN	TŘ.Č.
VYPR.		NORM. REF.		POZN.	Č. KUSOVNÍKU
PŘEKR.					
TECHNOL.		SCHVÁLIL.	12.9.2020	STARÝ V.	Č.V.

NÁZEV

Gearbox SG070

TGN3, TGH3, TGT3

Listů List