Engineering data		
Ratio	16	
Number of stages	2	
Rated output torque	26	Nm
Cycling output torque	33	Nm
Max output torque	48	Nm
Emergency output torque	88	Nm
Rated input speed	4500	rpm
Max input speed	13000	rpm
Efficiency*	95	%
Operating temperature	<-25; 90>	°C
Backlash	< 12	arcmin
Service life	20000	h
Running noise	58	dB(A)
Torsional stiffness	5.70	Nm/arcmin

** at rated speed & torque*

Lubrication	
Type	Standard
Lubricant	Grease (lifetime lubrication)

Customs info	
HS Code	84834090

Mechanical data		
Radial force for 20'000h*	1050	N
Radial force for 30'000h*	900	N
Max. radial force*	1650	N
Axial force for 20'000h	1350	N
Axial force for 30'000h	1000	N
Max. axial force	2100	N
Protection	IP54	
Input inertia	0.09	kgcm2
Mass	1.70	kg
Tilting moment for 20'000h	42	Nm
Tilting moment for 30'000h	36	Nm
Max. bending moment	12	Nm
Output shaft design	Smooth shaft	

** Defined for point of action at ½ output shaft length*

Supported motors		
Motor types	TGN2, TGT2, TGH2	
Clamping diameter	11	mm
Input flange	Motor adaptation - one part	
Installation position	Any	

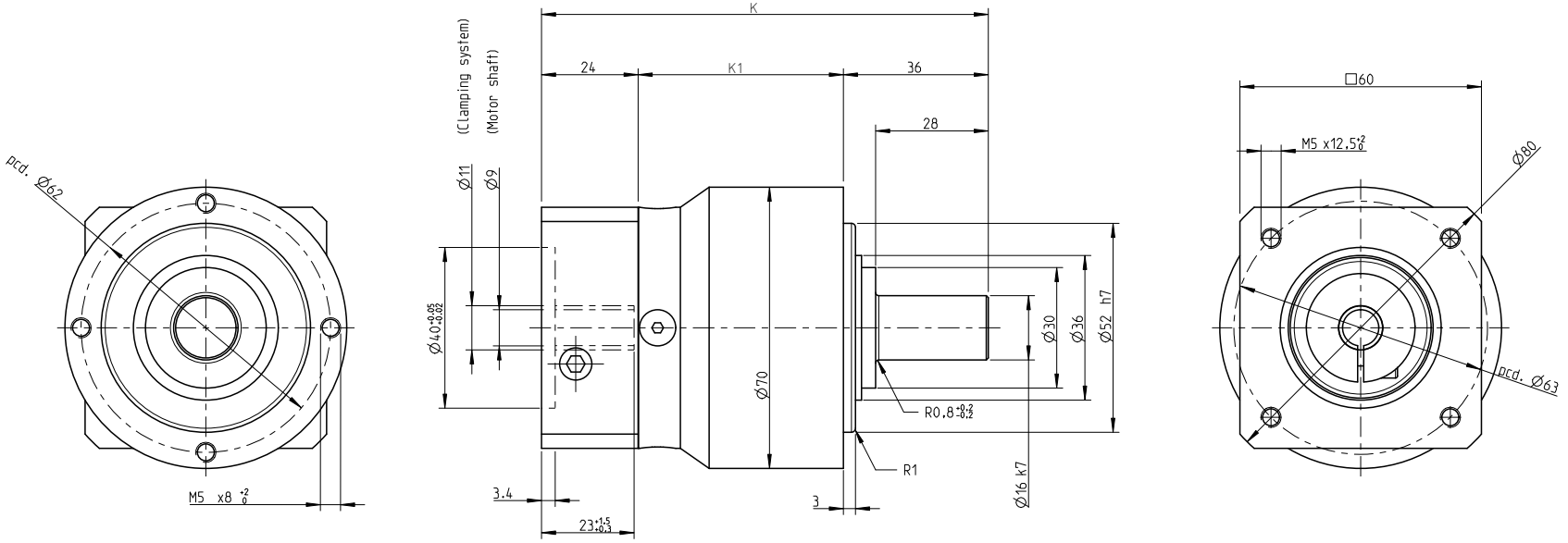

NO OF STAGES	K	K1
I. stage	111	51
II. stage	124	64

INDEX	ZMĚNA	DATUM	PODPIS		
ZM.MAT.			T.O.	HMOTNOST kg	MĚŘ.
ROZM.-POLOT.					
ROZM. ZAŘ.				ČSN	TŘ.Č.
VYPR.		NORM. REF.		POZN.	Č. KUSOVNÍKU
PŘEKR.					
TECHNOL.		SCHVÁLIL.	12.9.2020	STARÝ V.	Č.V.

NÁZEV

Gearbox SG070

TGN2, TGH2, TGT2

Listů List