Engineering data		
Ratio	9	
Number of stages	2	
Rated output torque	52	Nm
Cycling output torque	97	Nm
Max output torque	146	Nm
Emergency output torque	260	Nm
Rated input speed	4000	rpm
Max input speed	7000	rpm
Efficiency	97	%*
Operating temperature	<-25; 90>	°C
Backlash	< 9	arcmin
Service life	20000	h
Running noise	60	dB(A)
Torsional stiffness	16.10	Nm/arcmin

** at rated speed & torque*

Mechanical data		
Radial force for 20'000h	1900	N*
Radial force for 30'000h	1700	N*
Max. radial force	3100	N*
Axial force for 20'000h	2000	N
Axial force for 30'000h	1500	N
Max. axial force	3800	N
Protection	IP54	
Input inertia	0.62	kgcm2
Mass	3.92	kg
Tilting moment for 20'000h	99	Nm
Tilting moment for 30'000h	89	Nm
Max. bending moment	16	Nm
Output shaft design	Shaft key	

** Defined for point of action at ½ output shaft length*

Lubrication	
Type	Standard
Lubricant	Grease (lifetime lubrication)

Customs info	
HS Code	84834090

Supported motors		
Motor types	TGN4, TGT4, TGH4	
Clamping diameter	19	mm
Input flange	Motor adaptation - one part	
Installation position	Any	

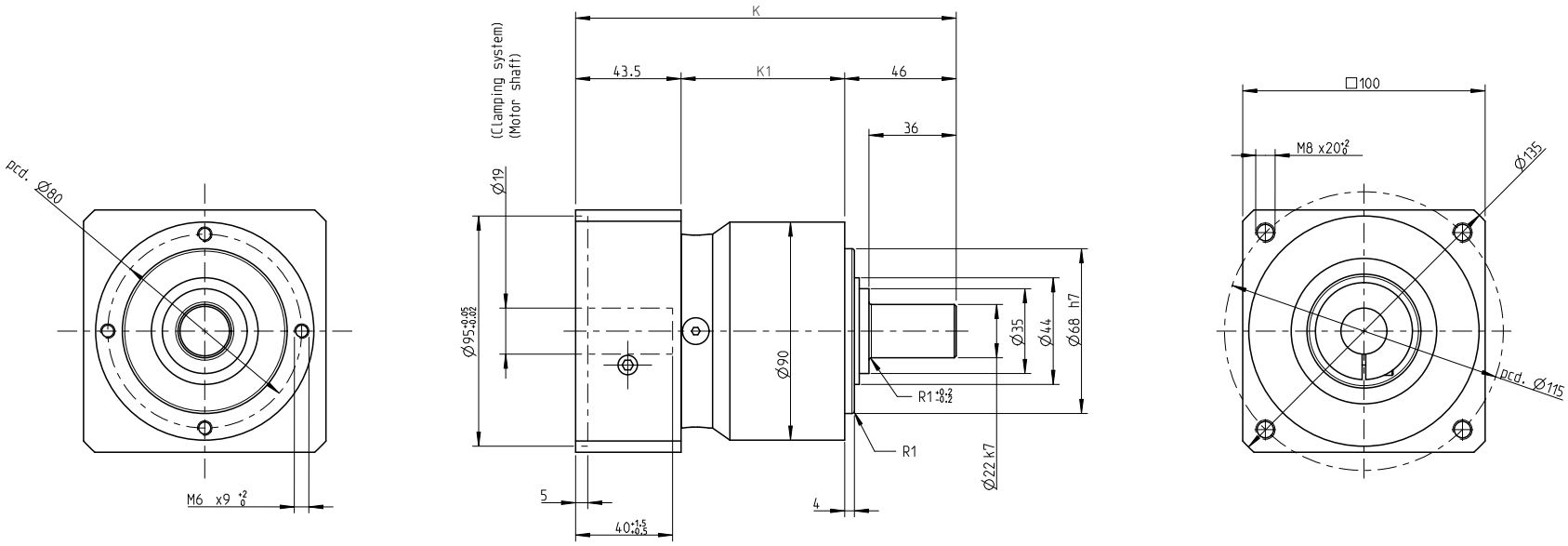

NO OF STAGES	K	K1
I. stage	157	67,5
II. stage	174,5	85

INDEX / ZMĚNA		DATUM	PODPIS	
ZM.MAT.		T.O.	HMOTNOST kg	MĚŘ.
ROZM.-POLOT.				
ROZM. ZAŘ.			ČSN	TŘ.Č.
VYPR.	NORM. REF.		POZN.	Č. KUSOVNÍKU
PŘEKR.				
TECHNOL.	SCHVÁLIL.	12.9.2020	STARÝ V.	Č.V.
NÁZEV Gearbox SG090			TGN4, TGH4, TGT4	
			Listů	List