Engineering data		
Ratio	64	
Number of stages	2	
Rated output torque	6	Nm
Cycling output torque	7.5	Nm
Max output torque	12	Nm
Emergency output torque	27	Nm
Rated input speed	5000	rpm
Max input speed	18000	rpm
Efficiency*	86	%
Operating temperature	<-25; 90>	°C
Backlash	< 19	arcmin
Service life	20000	h
Running noise	58	dB(A)
Torsional stiffness	1.05	Nm/arcmin

** at rated speed & torque*

Lubrication	
Type	Standard
Lubricant	Grease (lifetime lubrication)

Customs info	
HS Code	84834090

Mechanical data		
Radial force for 20'000h*	800	N
Radial force for 30'000h*	700	N
Max. radial force*	1300	N
Axial force for 20'000h	1000	N
Axial force for 30'000h	800	N
Max. axial force	1000	N
Protection	IP54	
Input inertia	0.02	kgcm2
Mass	0.78	kg
Tilting moment for 20'000h	26	Nm
Tilting moment for 30'000h	22	Nm
Max. bending moment	4	Nm
Output shaft design	Shaft key	

** Defined for point of action at ½ output shaft length*

Supported motors	
Motor types	TGN2, TGT2, TGH2
Clamping diameter	9 mm
Input flange	Motor adaptation - one part
Installation position	Any

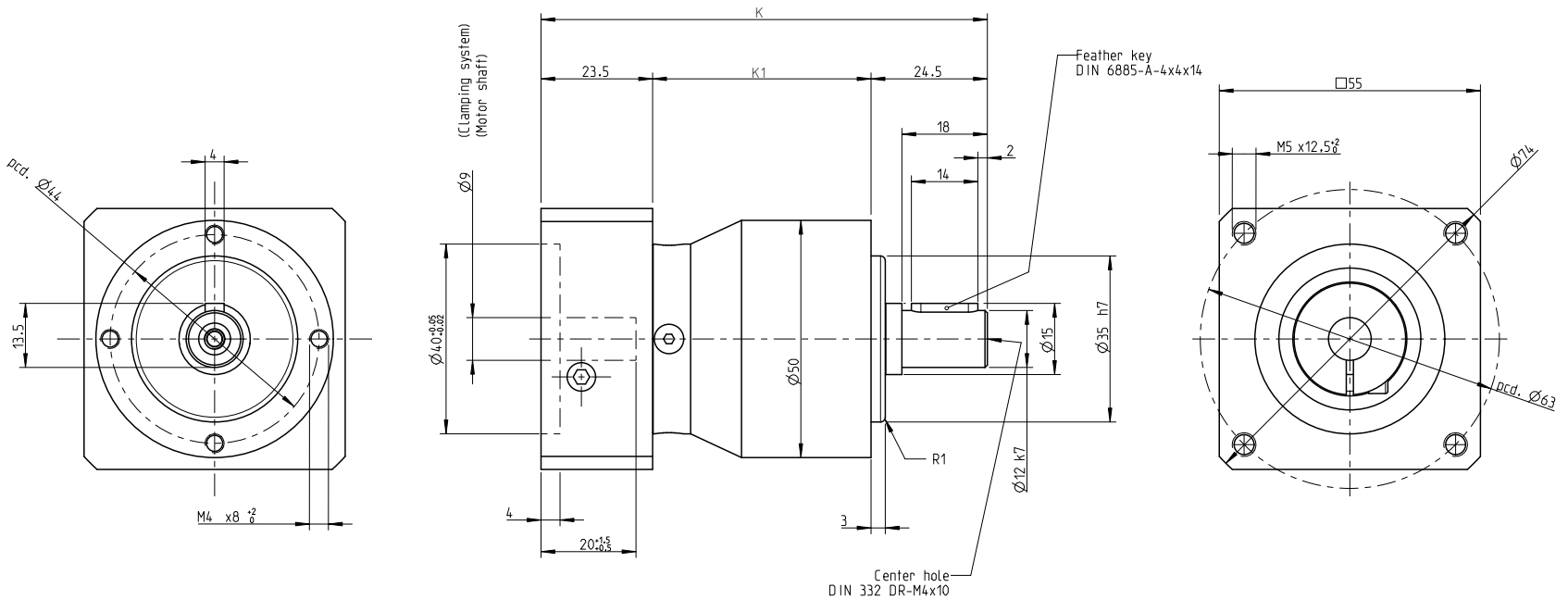

NO OF STAGES	K	K1
I. stage	94	46
II. stage	106,5	58,5

INDEX	ZMĚNA	DATUM	PODPIS		
ZM.MAT.		T.O.	HMOTNOST kg	MĚŘ.	
ROZM.-POLOT.					
ROZM. ZAŘ.			ČSN	TŘ.Č.	
VYPR.	NORM. REF.		POZN.	Č. KUSOVNÍKU	
PŘEKR.					
TECHNOL.	SCHVÁLIL.	12.9.2020	STARÝ V.	Č.V.	

NÁZEV

Gearbox SG050

TGN2, TGH2, TGT2

Listů List