Engineering data		
Ratio	15	
Number of stages	2	
Rated output torque	11	Nm
Cycling output torque	13	Nm
Max output torque	20	Nm
Emergency output torque	36	Nm
Rated input speed	5000	rpm
Max input speed	18000	rpm
Efficiency*	95	%
Operating temperature	<-25; 90>	°C
Backlash	< 19	arcmin
Service life	20000	h
Running noise	58	dB(A)
Torsional stiffness	1.05	Nm/arcmin

** at rated speed & torque*

Lubrication	
Type	Standard
Lubricant	Grease (lifetime lubrication)

Customs info	
HS Code	84834090

Mechanical data		
Radial force for 20'000h*	800	N
Radial force for 30'000h*	700	N
Max. radial force*	1300	N
Axial force for 20'000h	1000	N
Axial force for 30'000h	800	N
Max. axial force	1000	N
Protection	IP54	
Input inertia	0.03	kgcm2
Mass	0.77	kg
Tilting moment for 20'000h	26	Nm
Tilting moment for 30'000h	22	Nm
Max. bending moment	4	Nm
Output shaft design	Shaft key	

** Defined for point of action at ½ output shaft length*

Supported motors	
Motor types	TGN2, TGT2, TGH2
Clamping diameter	9 mm
Input flange	Motor adaptation - one part
Installation position	Any

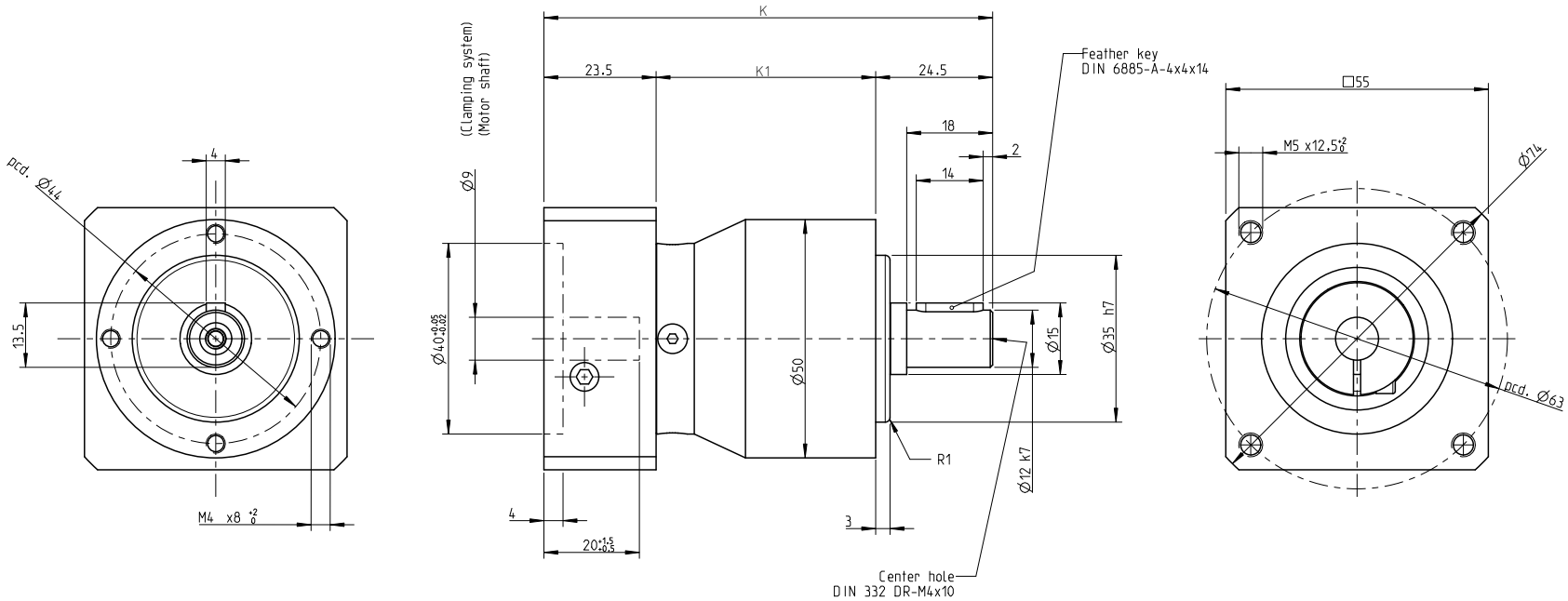

NO OF STAGES	K	K1
I. stage	94	46
II. stage	106,5	58,5

INDEX	ZMĚNA	DATUM	PODPIS		
ZM.MAT.		T.O.	HMOTNOST kg	MĚŘ.	
ROZM.-POLOT.					
ROZM. ZAŘ.			ČSN	TŘ.Č.	
VYPR.	NORM. REF.		POZN.	Č. KUSOVNÍKU	
PŘEKR.					
TECHNOL.	SCHVÁLIL.	12.9.2020	STARÝ V.	Č.V.	

NÁZEV

Gearbox SG050

TGN2, TGH2, TGT2

Listů List